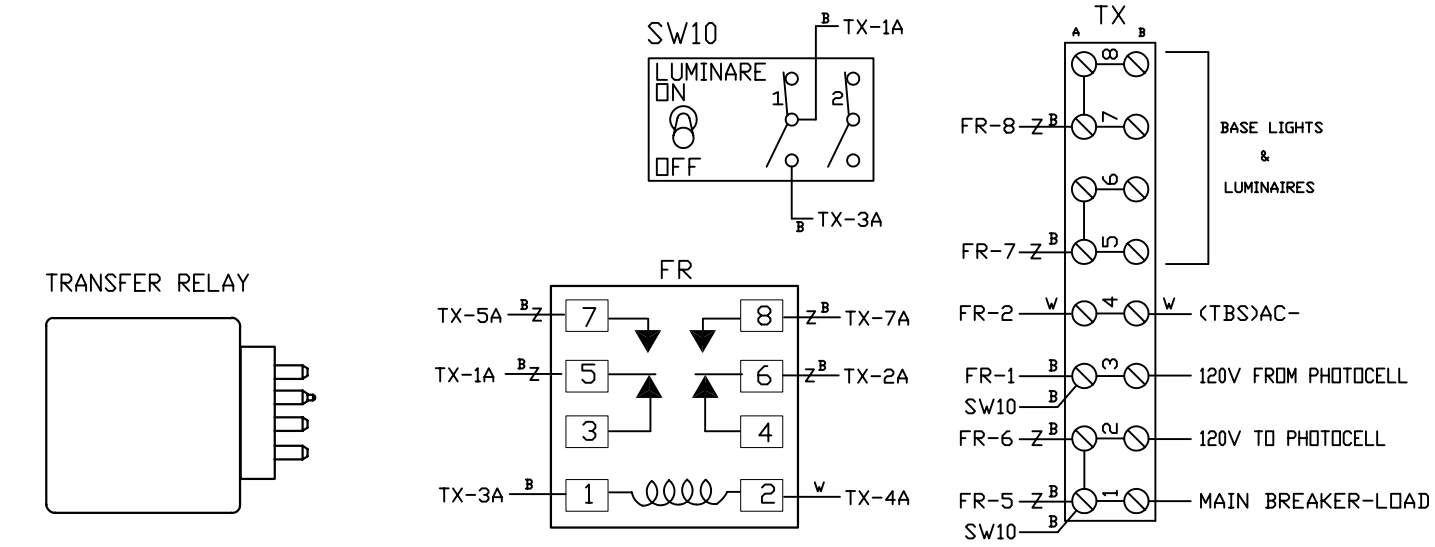

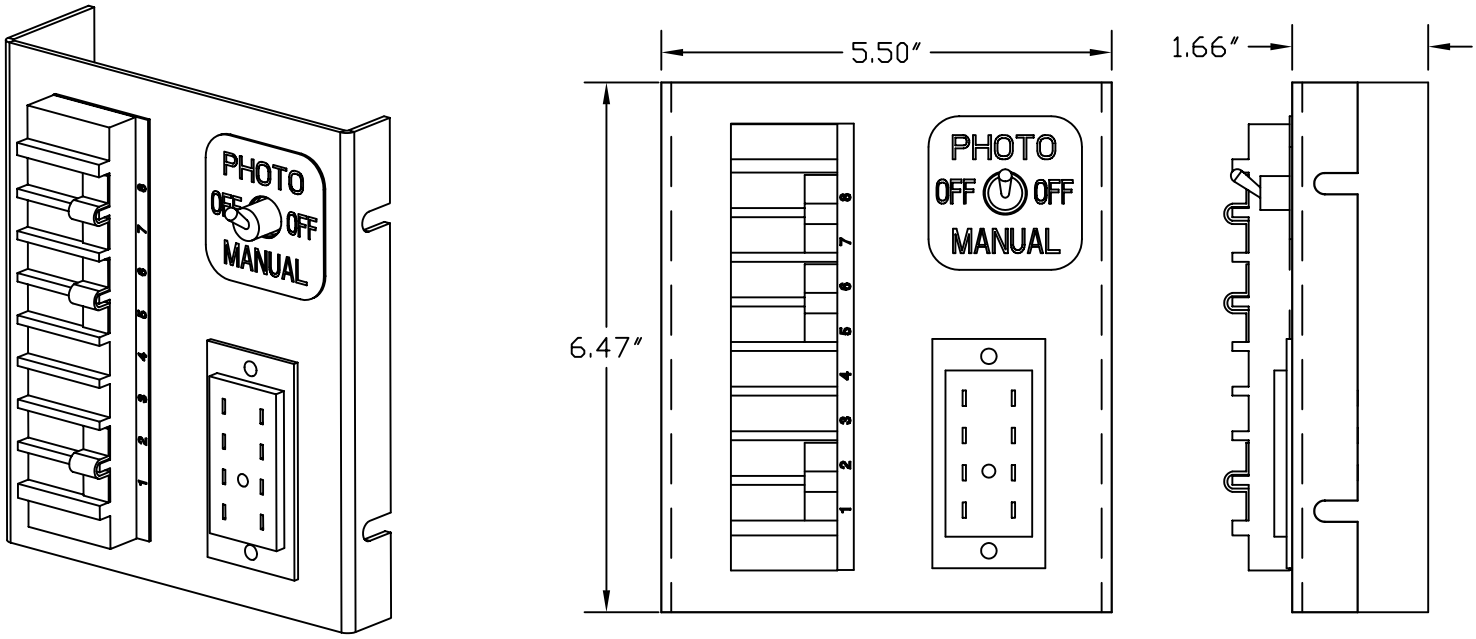

SAFETY LIGHT PANEL

TITLE: SAFETY LIGHT PANEL HOUSING #3	
Rev Date 09-19-03	A–1–3
MAY 8, 2003	