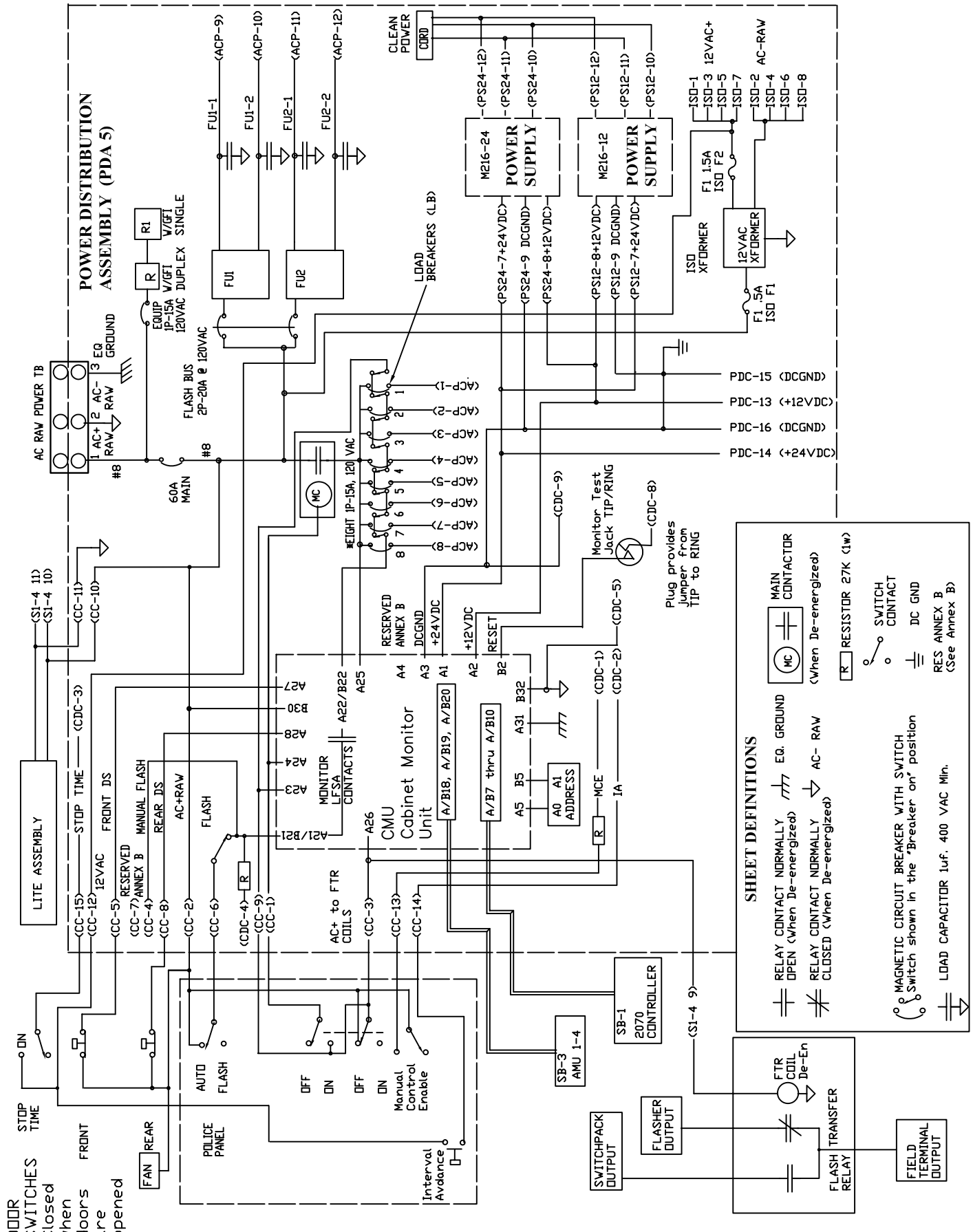

TITLE:

PDA ITS/CABINET WIRING DIAGRAM

Rev Date 09-19-03

MAY 8, 2003

6-5-21